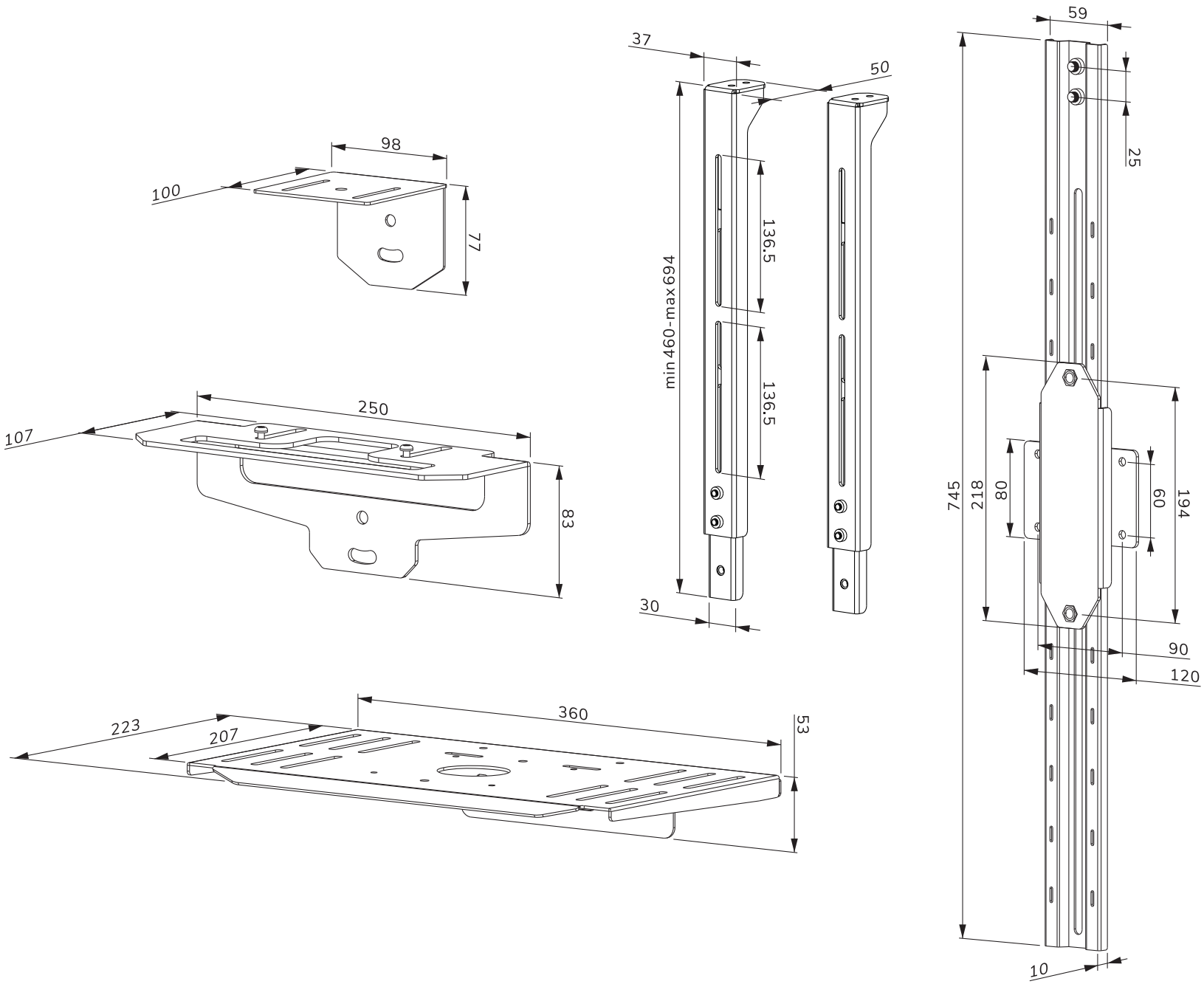

Neomounts

Measuring unit: mm

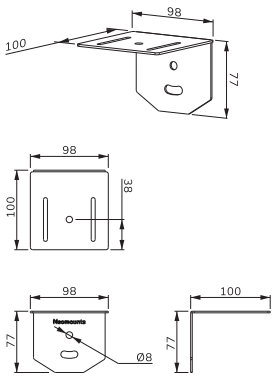
98
100
77
98
100
38
98
100
Neomounts
77
Ø8
77

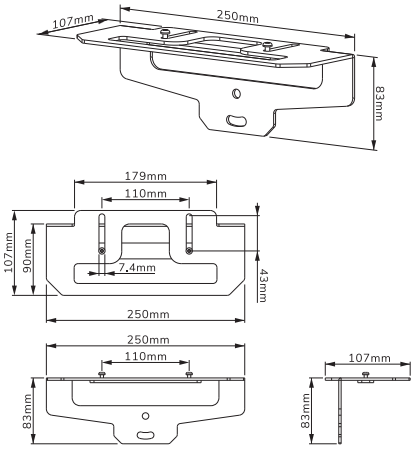
107mm
250mm
83mm
179mm
110mm
107mm
90mm
7.4mm
43mm
250mm
250mm
110mm
83mm
107mm
83mm

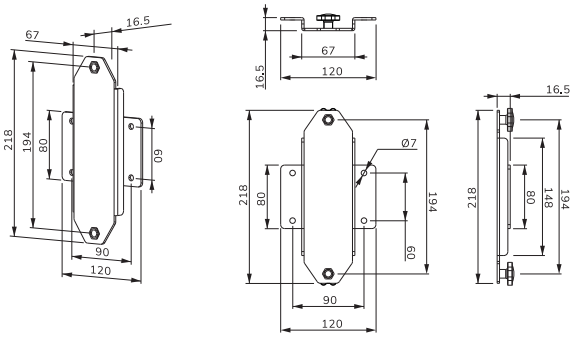
67
16.5
218
194
80
60
90
120
67
120
16.5
Ø7
218
80
194
60
90
120
16.5
218
80
148
194

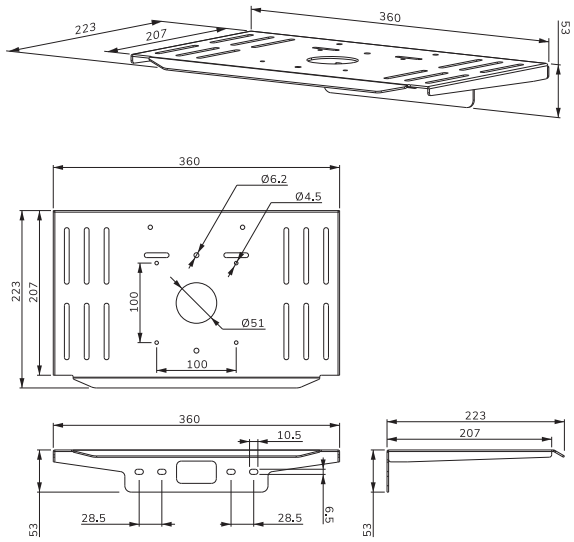
223
207
360
53
360
Ø6.2
Ø4.5
223
207
100
Ø51
100
360
10.5
223
207
53
28.5
28.5
6.5
53

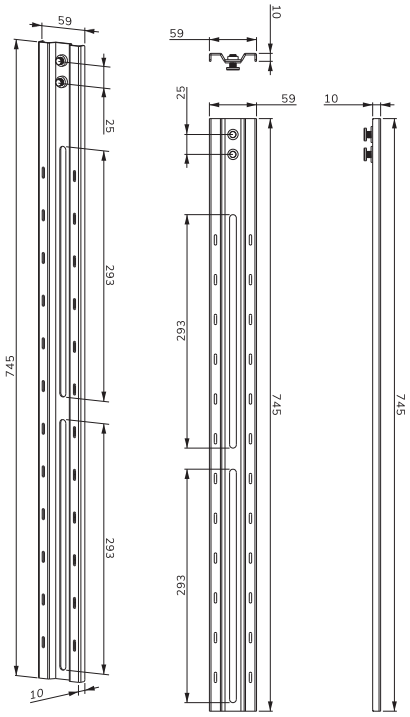
59
25
293
745
293
10
59
10
25
59
10
293
745
293
745

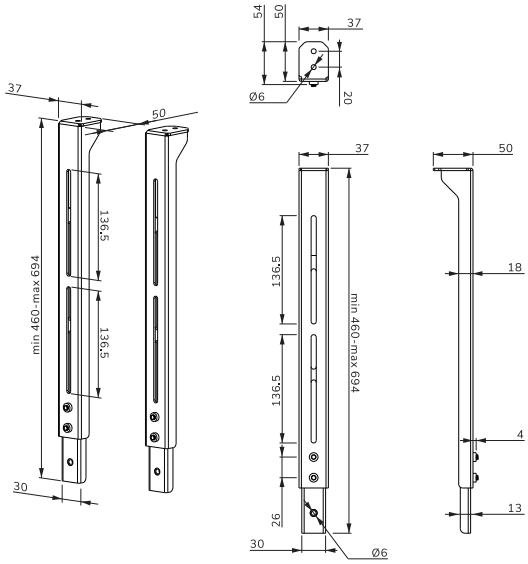
54
50
37
Ø6
20
37
50
min 460-max 694
136.5
136.5
30
37
50
136.5
136.5
min 460-max 694
18
4
13
26
30
Ø6

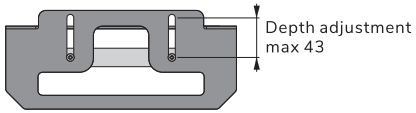

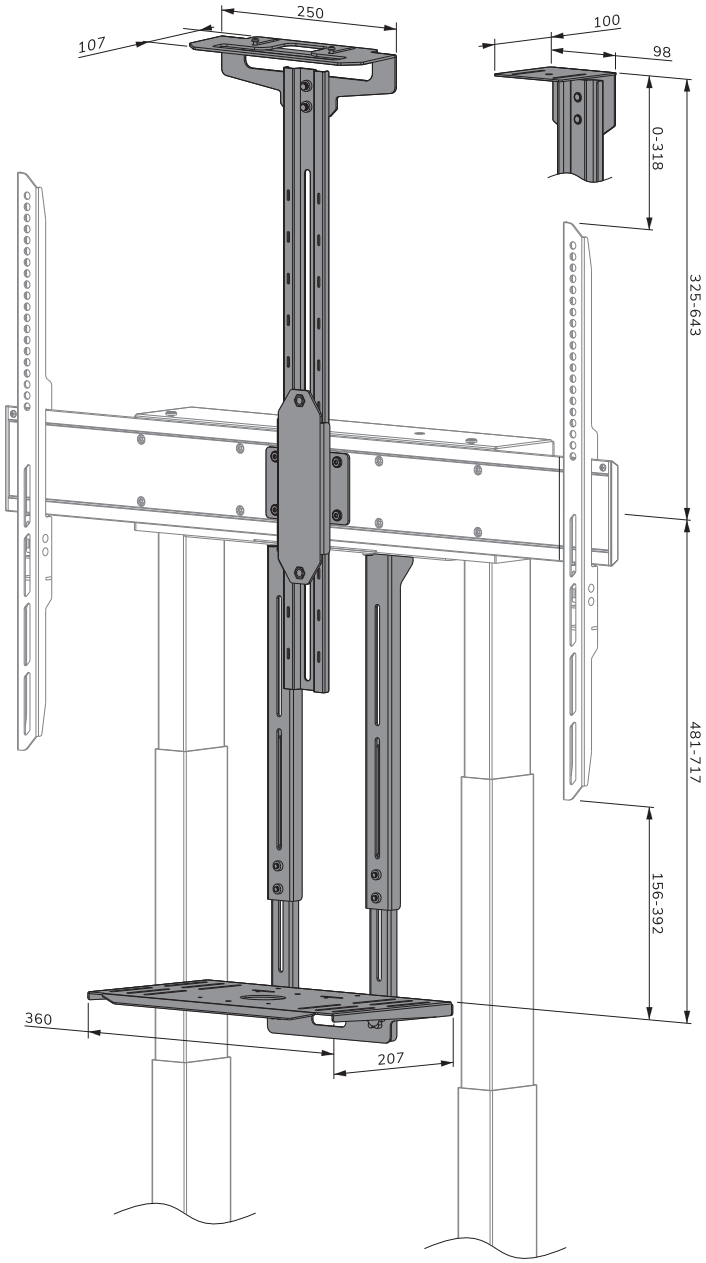

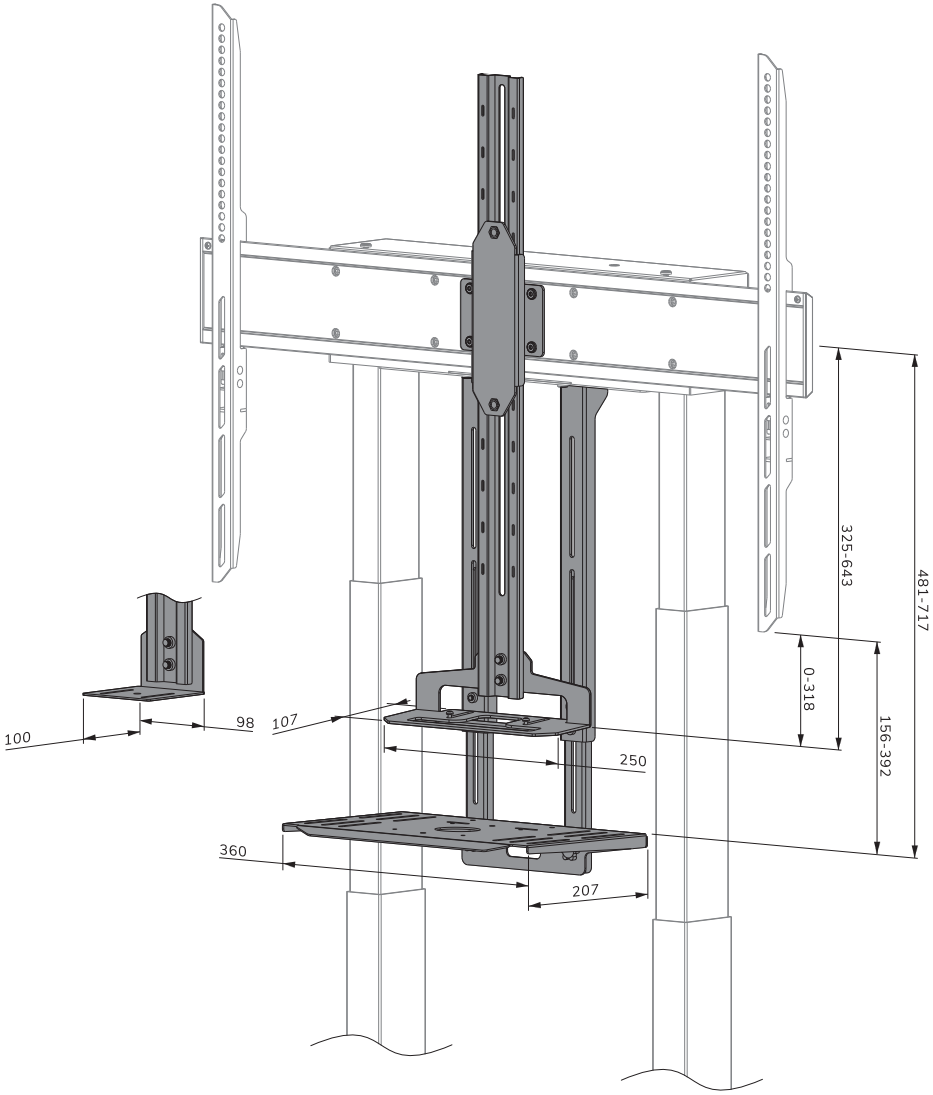

Neomounts

Measuring unit: mm